# Building Integrated Dye Sensitized Solar Cells

Adélio Mendes

ERC Special Day - Lisbon
September 25, 2014

Universidade do Porto
Faculdade de Engenharia
FEUP
Chemical Engineering Department

# Portugal & Porto

Universidade do Porto
FEUP Faculdade de Engenharia

# The sun

# The sun

**SUN** – A nuclear fusion reactor located at a safe distance

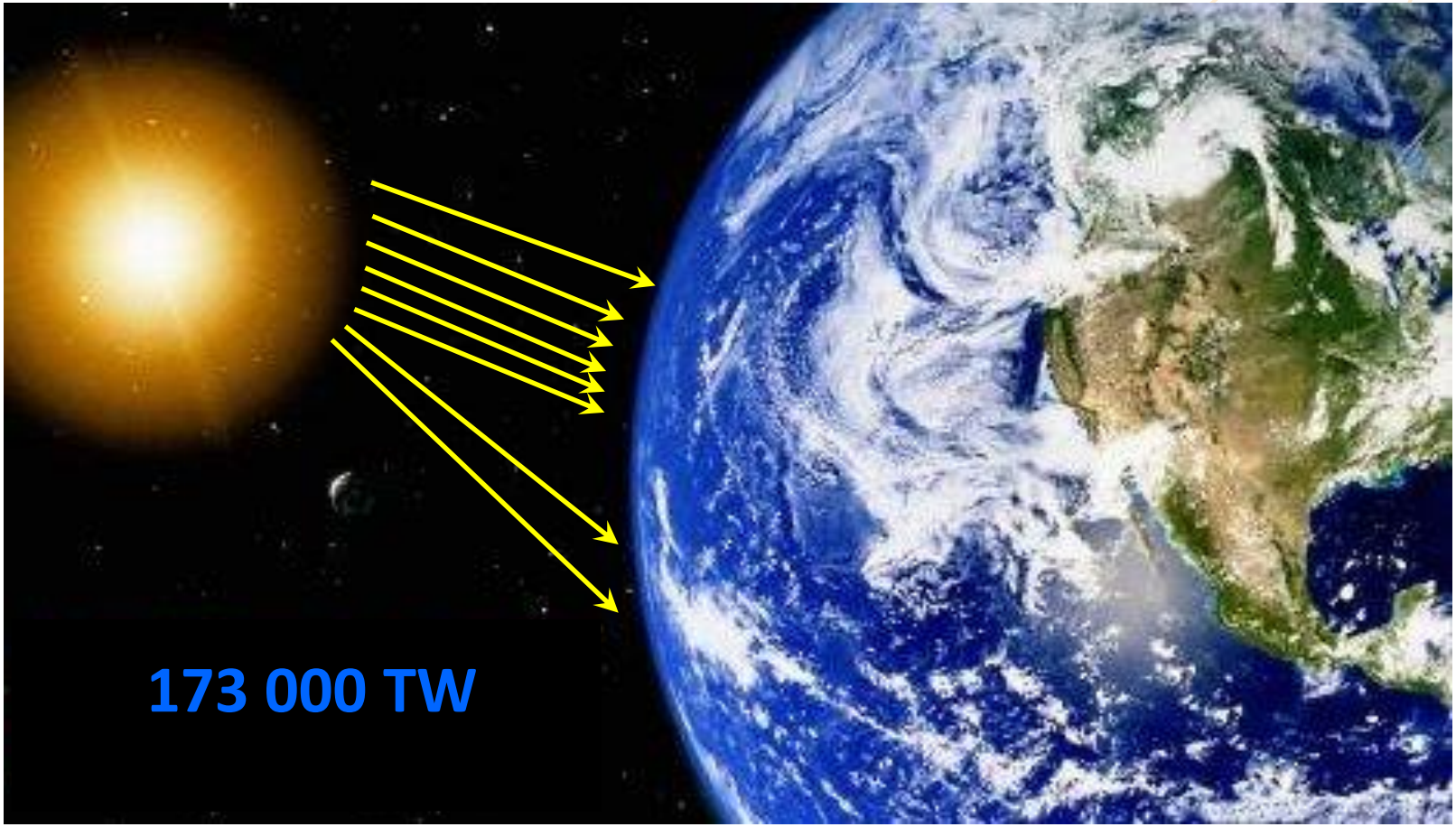

# The sun

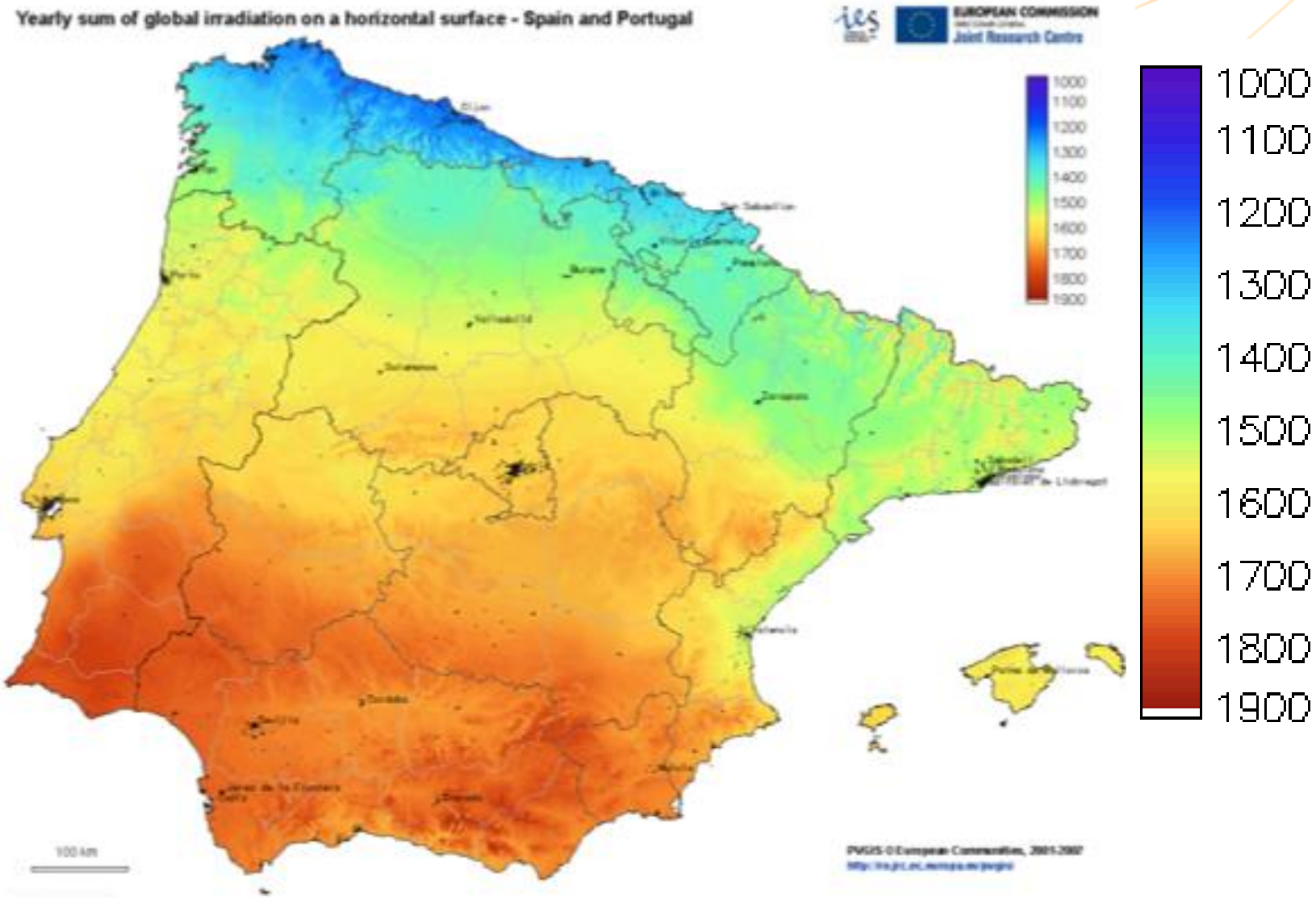
Yearly sum of global irradiation on a horizontal surface - Spain and Portugal
EUROPEAN COMMISSION
Joint Research Centre
1000
1100
1200
1300
1400
1500
1600
1700
1800
1900

# BI-DSC

# Building Integrated DSCs

**Title**: “Building Integrated Dye Sensitized Solar Cells”

**Ref**.: BI-DSC, 321315

**Budget**: 1 989 300,00 €

**Starting date**: March 1st, 2013;

**Duration**: 60 months.

# Building Integrated DSCs

Objectives of the project:

- ✓ New laser assisted glass sealing of glass photovoltaic cells;
- ✓ New graphene counter-electrode – as transparent and active as platinum counter-electrode;
- ✓ More electrical conductive substrates – ETCO;
- ✓ Better sensitizer – carbon quantum dots.

# Building Integrated DSCs

Objectives of the project:

- ✓ Lab size devices with at least 13 % of energy conversion efficiency;
- ✓ Larger size devices with at least 9 % of energy conversion efficiency.

# Nearly zero-energy buildings

# Nearly zero-energy buildings

**Nearly zero-energy buildings** – (Directive 2010/31/EU):

*"Member States shall ensure that by* ***31 December 2020 all new buildings*** *are nearly zero-energy buildings; and after* ***31 December 2018, new buildings occupied and owned by public authorities*** *are nearly zero-energy buildings".*

# Nearly zero-energy buildings

## Moving beyond grid-parity

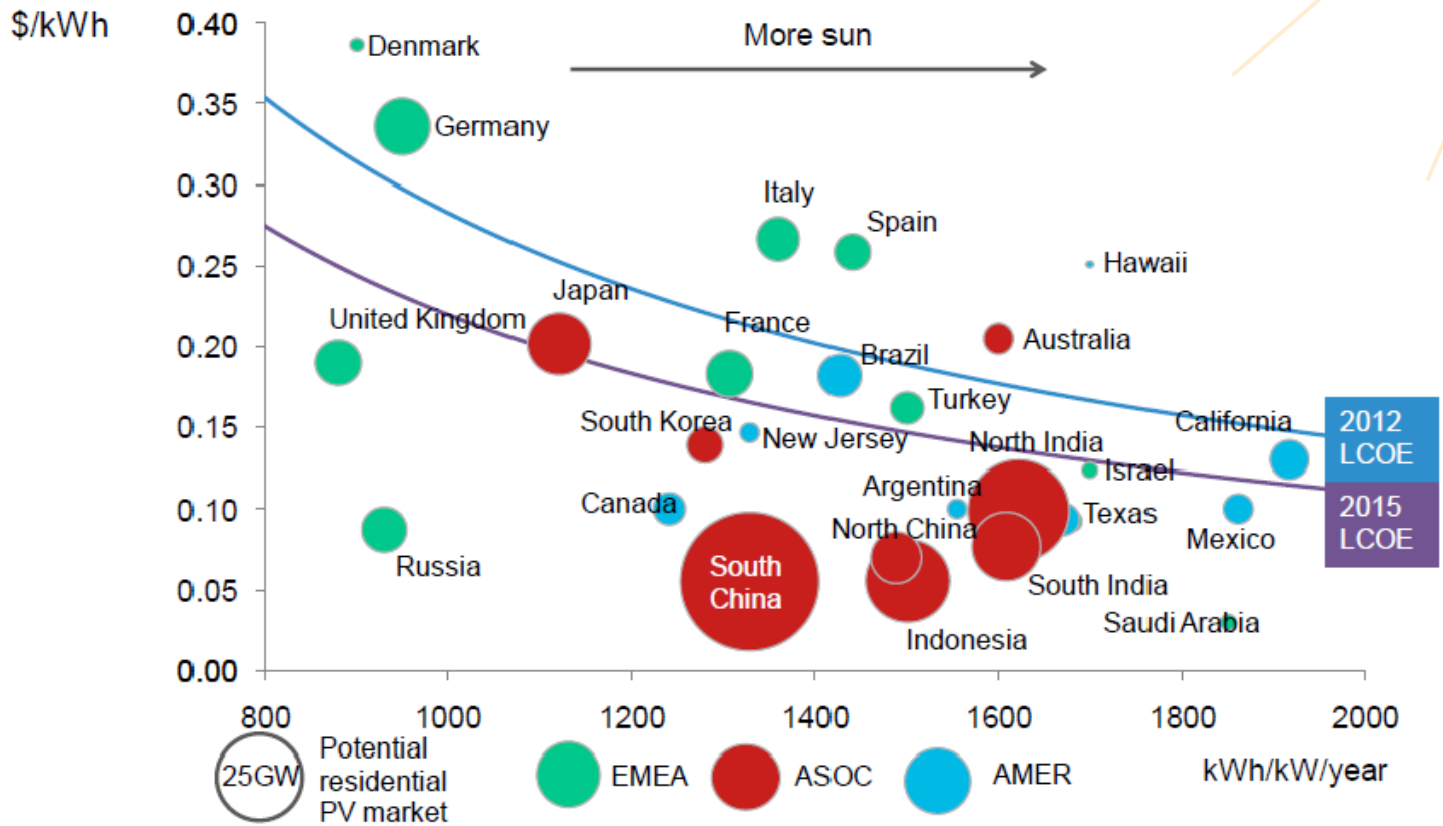


**Figure 6:** Residential PV price parity (size of bubbles refers to market size) (BNEF, 2012a).
Note: LCOE based on 6% weighted average cost of capital, 0.7%/year module degradation, 1% capex as O&M annually, $3.01/W capex assumed for 2012, $2.00/W for 2015.

# Nearly zero-energy buildings

Local electricity storage is required because:

- ✓ Stabilizing the local (low potential) grid;
- ✓ Make the renewable electricity dispatchable;
- ✓ Make the production of renewable electricity more profitable – no feed-in tariffs are assumed.

# Emerging PV technologies

# A new world

Energy from façades (Dye sensitized solar cells)

Energy from wind turbine and PV

http://dailyfusion.net/2013/11/swisstech-convention-center-features-multicolored-solar-panel-facade-24431/ http://architecture-view.com/tag/roof/page/6/

# Dye Sensitized Solar Cells

Dye sensitized solar cells (DSC) :

- ✓ Considered organic PV type.
- ✓ Maximum energy efficiency: 12 %.

- + Low cost and high efficiency harvesting diffuse light.
- + Very aesthetic for BIPV.
- + Uses abundant and non toxic materials.

- - Moderate efficiencies.
- - Not yet commercial.

# Perovskite Solar Cells

Perovskite solar cells (DSC) :

- ✓ Considered organic PV type.
- ✓ Maximum energy efficiency: >19 %.

- + Low price and high efficiency harvesting diffuse light.
- + Very aesthetic for BIPV.
- + Uses abundant materials.

- - Contains minimal amounts of lead.
- - Not yet commercial.

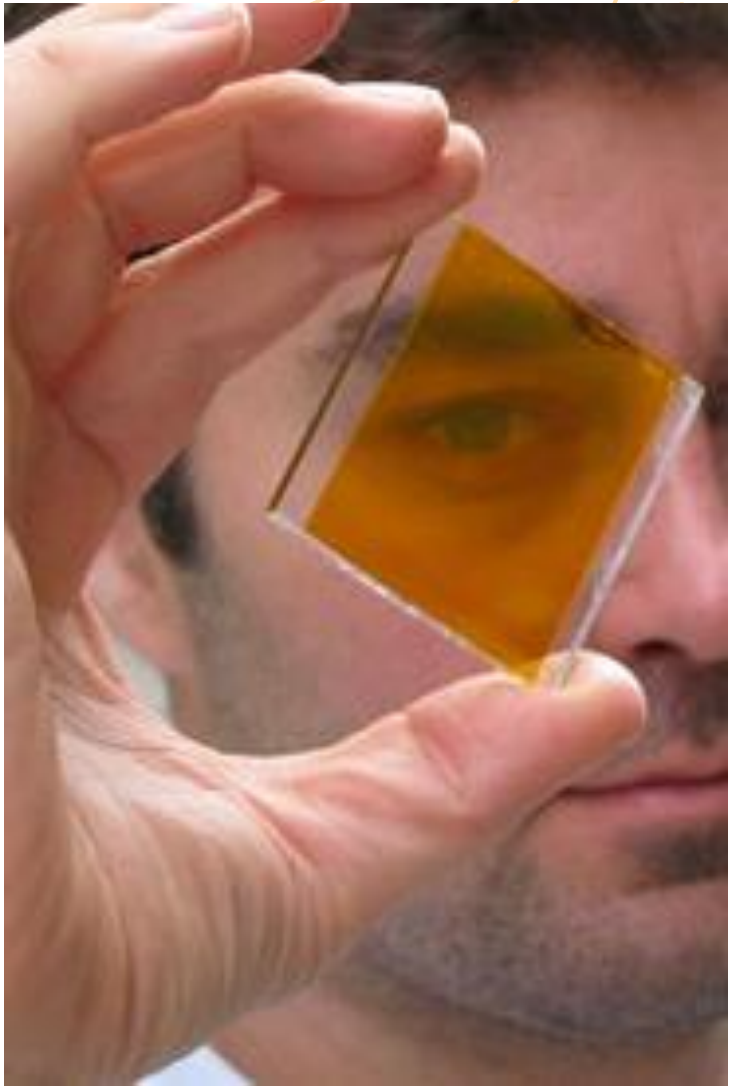

http://deepresource.wordpress.com/2013/08/12/perovskites-price-solar-down-to-10-20-cents/

# Perovskite Solar Cells

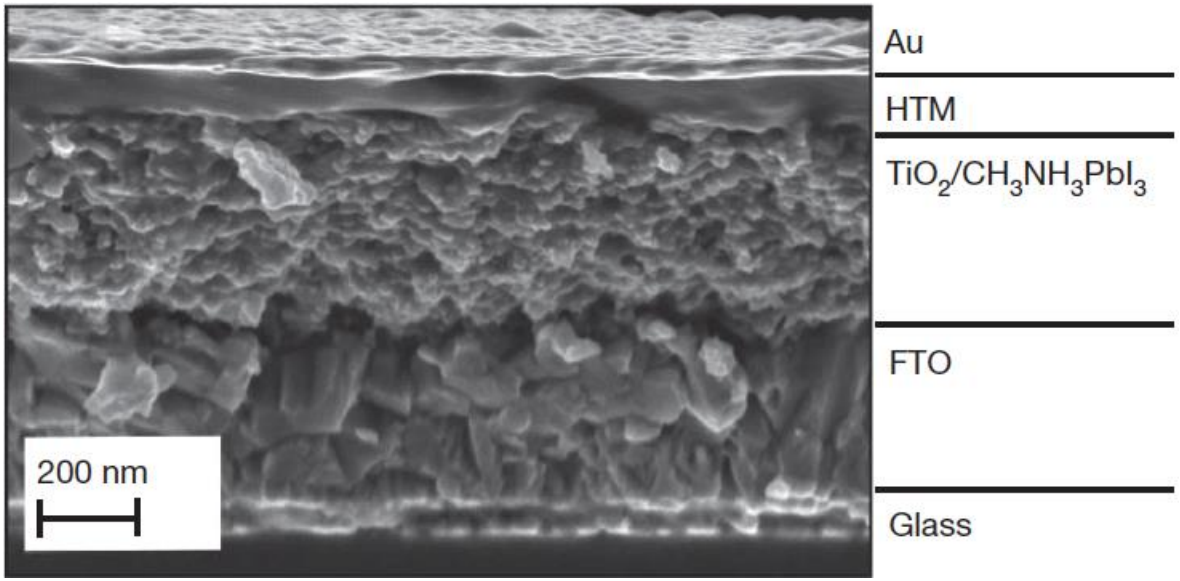


$\eta \approx 15\ \%$

LETTER

doi:10.1038/nature12340

**Sequential deposition as a route to high-performance perovskite-sensitized solar cells**

Julian Burschka[1]*, Norman Pellet[1,2]*, Soo-Jin Moon[1], Robin Humphry-Baker[1], Peng Gao[1], Mohammad K. Nazeeruddin[1] & Michael Grätzel[1]

**2013**

# Perovskite Solar Cells

Perovskite cells towards industrialization:

- ✓ **UPorto** developed a new low temperature (<120 ° C) laser assisted glass sealing process.

# Technologies for storing electrical energy

# Energy storage

## Storage cost per cycle

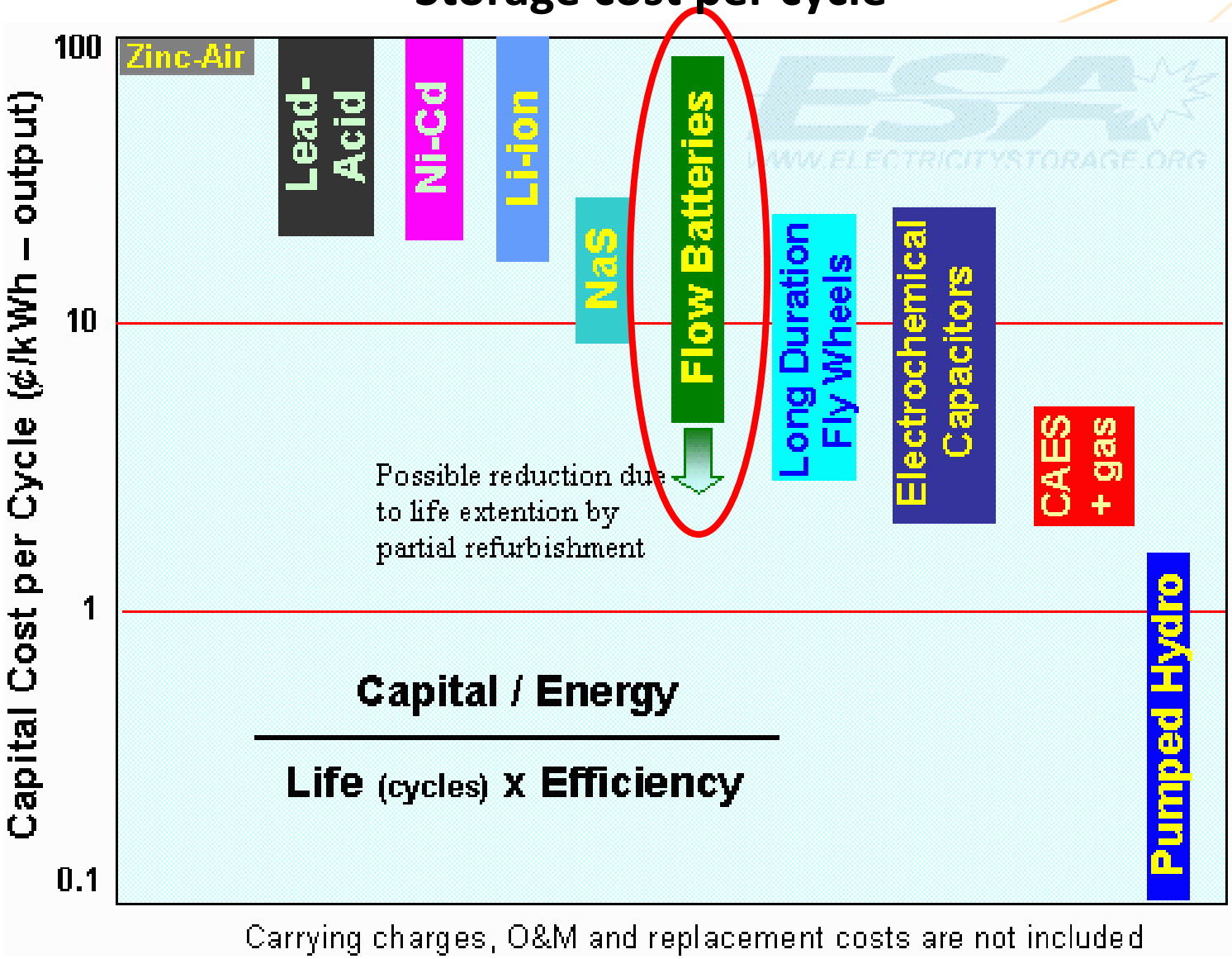

# Solar rechargeable redox flow battery

ELSEVIER

Available online at www.sciencedirect.com

ScienceDirect

Progress in Natural Science 19 (2009) 291–312

Progress in Natural Science

www.elsevier.com/locate/pnsc

Review

Progress in electrical energy storage system: A critical review

Haisheng Chen [a,b], Thang Ngoc Cong [a], Wei Yang [a], Chunqing Tan [b], Yongliang Li [a], Yulong Ding [a,*]

Status and recommendations for RD&D on energy storage technologies in a Danish context

February 2014

## Electricity storage cost per cycle

- ✓ Vanadium flow battery (VFB): **4 – 60 ¢€/kWh (3 ¢€/kWh by 2050*);**
- ✓ Polysulphide bromide flow battery (RFB): **4 – 60 ¢€/kWh**;
- ✓ Pumped hydroelectric storage (PHS): **0.1 – 1 ¢€/kWh;**
- ✓ Fuel cell: **4400 – 15 000 ¢€/kWh**;
- ✓ Lead-acid battery – **150 – 300 ¢€/kWh**.

# Redox flow battery

# Solar rechargeable redox flow battery

J Appl Electrochem
DOI 10.1007/s10800-011-0348-2

ORIGINAL PAPER

**Redox flow batteries: a review**

Adam Z. Weber · Matthew M. Mench · Jeremy P. Meyers · Philip N. Ross · Jeffrey T. Gostick · Qinghua Liu

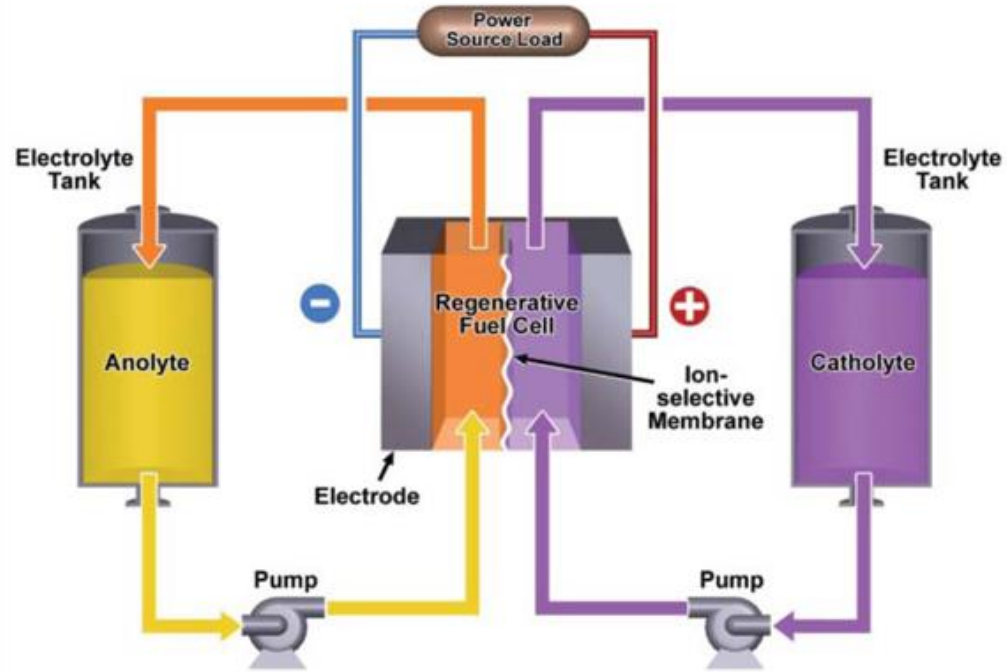


**Anode-side:** All vanadium redox flow battery (VRB) **Cathode-side:**

$$V^{3+} + e^- \underset{Discharge}{\overset{Charge}{\rightleftharpoons}} V^{2+} \qquad VO^{2+} + H_2O - e^- \underset{Discharge}{\overset{Charge}{\rightleftharpoons}} VO_2^+ + 2H^+$$

Polysulfide-bromide battery (PSB)

$$3B_r^- - 2e^- \underset{Discharge}{\overset{Charge}{\rightleftharpoons}} B_{r3}^- \qquad S_4^{2-} + 2e^- \underset{Discharge}{\overset{Charge}{\rightleftharpoons}} 2S_2^{2-}$$

Zinc-bromide batteries (ZBB)

$$Zn^{2+} + 2e^- \underset{Discharge}{\overset{Charge}{\rightleftharpoons}} Z_n \qquad 2B_r^- - 2e^- \underset{Discharge}{\overset{Charge}{\rightleftharpoons}} B_{r2}^-(aq)$$

# Solar rechargeable redox flow battery

ELSEVIER

Available online at www.sciencedirect.com
ScienceDirect

Journal of Power Sources 160 (2006) 716–732

JOURNAL OF POWER SOURCES

www.elsevier.com/locate/jpowsour

Review

Redox flow cells for energy conversion

C. Ponce de León [a,*], A. Frías-Ferrer [b], J. González-García [b], D.A. Szánto [c], F.C. Walsh [a]

## Discharge

Positive (anode): $VO_2^+ + 2H^+ + e^- \rightarrow VO^{2+} + H_2O$, $E^0 = 0.99\ V_{SHE}$

Negative (cathode): $V^{2+} \rightarrow V^{3+} + e^-$, $E^0 = 0.26\ V_{SHE}$

$2(VO_2)_2SO_4 + H_2SO_4 + 2VSO_4 \rightarrow 2VOSO_4 + 2H_2O + V_2(SO_4)_3$, $E^0 = 1.25\ V$

## Charge

Positive (cathode): $VO_2^+ + 2H^+ + e^- \leftarrow VO^{2+} + H_2O$, $E^0 = -0.99\ V_{SHE}$

Negative (anode): $V^{2+} \leftarrow V^{3+} + e^-$, $E^0 = -0.26\ V_{SHE}$

$2VOSO_4 + 2H_2O + V_2(SO_4)_3 \rightarrow 2(VO_2)_2SO_4 + H_2SO_4 + 2VSO_4$, $E^0 = -1.25\ V$

# Solar rechargeable redox flow battery

## Concept and Efficiency

**Vanadium RFB**

| | |
|---|---|
| Specific energy | ~30 $Wh \cdot kg^{-1}$ (compared Li-ion, 150 $Wh \cdot kg^{-1}$) |
| Energy density | ~30 $Wh \cdot L^{-1}$ |
| Charge/discharge efficiency | 80 % |
| Time durability | 20 years |
| Nominal cell voltage | 1.25 V |

# Solar rechargeable redox flow battery

→ generate → store → utilise

GILDEMEISTER
energy solutions

## Technical data

| Performance and energy* | CellCube FB 10-100 Multi-Stage** |
|---|---|
| **Power charge rating** / max. AC power charge rating / continuous power charge rating | 10 kW<br>15 kW<br>12 kW |
| **Power discharge rating** / max. AC output power rating / continuous **power discharge rating** | 10 kW<br>15 kW<br>8 kW |
| Energy storage capacity | 100 kWh |
| **Battery and system voltage** | |
| Output voltage option | 48 VAC; 120 VAC; 230 VAC (1-phase); 400 VAC (3-phase) |
| **Control** | |
| Control via external interfaces | |
| **Monitoring** | |
| Status condition via remote accessibility by e-mail | State of charge (SOC), available energy, charge/discharge power, etc. |
| **Efficiency** | |
| Charge/discharge cycle DC | up to 80% |
| Multi-stage operation reduces energy loss | 3 independent, stoppable cycles with energy-efficient pump regulation |
| **Discharge time with power rating** | |
| Discharge time (autonomy) | 10 hours at 8 kW, continuous |
| 1 hour*** | |
| 2 hours*** | |
| 3,5 hours*** | |
| 5 hours*** | |
| **Auto-discharge** | |
| Auto-discharge in cold standby*** | 150 W |
| Auto-discharge in tank | Negligible (< 1% per year) |
| **Size and weight** | |
| Dimensions L × W × H (dry state) | 4,500 × 2,200 × 2,403 mm |
| Weight (dry state) | 3,500 kg |
| Total weight (loaded state) | 10,300 kg |

# Emerging redox flow battery

# Solar rechargeable redox flow battery

## A metal-free organic–inorganic aqueous flow battery

Brian Huskinson, Michael P. Marshak, Changwon Suh, Süleyman Er, Michael R. Gerhardt, Cooper J. Galvin, Xudong Chen, Alán Aspuru-Guzik, Roy G. Gordon & Michael J. Aziz

Affiliations | Contributions | Corresponding author

*Nature* **505**, 195–198 (09 January 2014) | doi:10.1038/nature12909

## Organic mega flow battery promises breakthrough for renewable energy

HARVARD TECHNOLOGY COULD ECONOMICALLY STORE ENERGY FOR USE WHEN THE WIND DOESN'T BLOW AND THE SUN DOESN'T SHINE

*January 8, 2014*

Michael J. Aziz (pictured) and others at Harvard University have developed a metal-free flow battery that relies on the electrochemistry of naturally abundant, small organic molecules to store electricity generated from renewable, intermittent energy sources. (Photo by Eliza Grinnell, SEAS Communications.)

# Solar rechargeable redox flow battery

9,10-anthraquinone-2,7-disulphonic acid (AQDS) – bromide acid redox flow battery:

- ✓ 99 % cyclic efficiency!
- ✓ Maximum power density: 600 mW·cm$^{-2}$;
- ✓ Current density: 1.3 A·cm$^{-2}$;
- ✓ Nominal cell voltage: ca. 0.8 V;
- ✓ Energy density: 50 Wh·L$^{-1}$;
- ✓ Cost: 70 % cheaper than vanadium

A metal-free organic–inorganic aqueous flow battery

Brian Huskinson, Michael P. Marshak, Changwon Suh, Süleyman Er, Michael R. Gerhardt, Cooper J. Galvin, Xudong Chen, Alán Aspuru-Guzik, Roy G. Gordon & Michael J. Aziz

Affiliations | Contributions | Corresponding author

*Nature* **505**, 195–198 (09 January 2014) | doi:10.1038/nature12909

**2014**

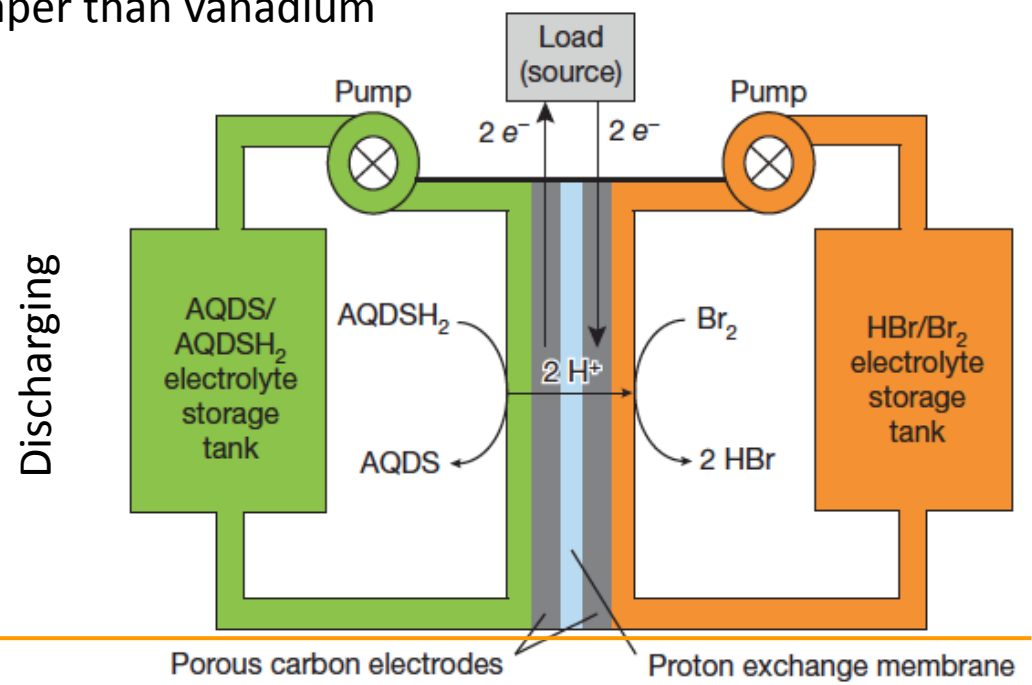

# Solar rechargeable redox flow battery

A metal-free organic–inorganic aqueous flow battery

Brian Huskinson, Michael P. Marshak, Changwon Suh, Süleyman Er, Michael R. Gerhardt, Cooper J. Galvin, Xudong Chen, Alán Aspuru-Guzik, Roy G. Gordon & Michael J. Aziz

Affiliations | Contributions | Corresponding author

*Nature* **505**, 195–198 (09 January 2014) | doi:10.1038/nature12909

Anthraquinone (9,10-anthraquinone-2,7-disulphonic acid - AQDS)

Discharge

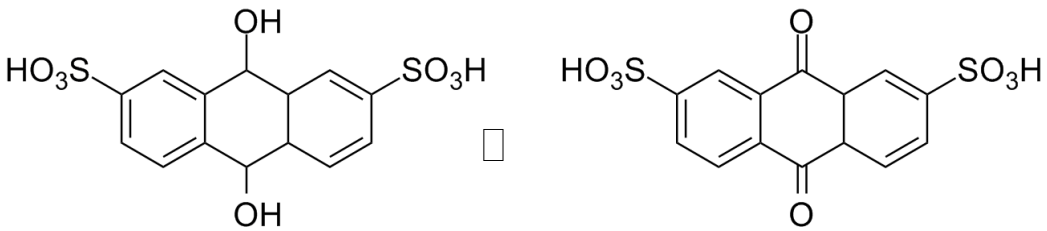


$+ 2e^- + 2H^+ \quad E^0 = -0.213$ V

$AQDSH_2 \rightarrow AQDS + 2e^- + 2H^+ \quad E^0 = -0.213\ V_{SHE}$

$Br_2 + 2e^- \rightarrow 2Br^- \quad E^0 = 1.07\ V_{SHE}$

**2014**

# Solar rechargeable redox flow battery

A1371
Journal of The Electrochemical Society, 161 (9) A1371-A1380 (2014)

**An Inexpensive Aqueous Flow Battery for Large-Scale Electrical Energy Storage Based on Water-Soluble Organic Redox Couples**

Bo Yang,* Lena Hoober-Burkhardt,* Fang Wang,* G. K. Surya Prakash,** and S. R. Narayanan***,z

*Loker Hydrocarbon Research Institute, Department of Chemistry, University of Southern California, Los Angeles, California 90089, USA*

## Full organic redox flow battery

Charge

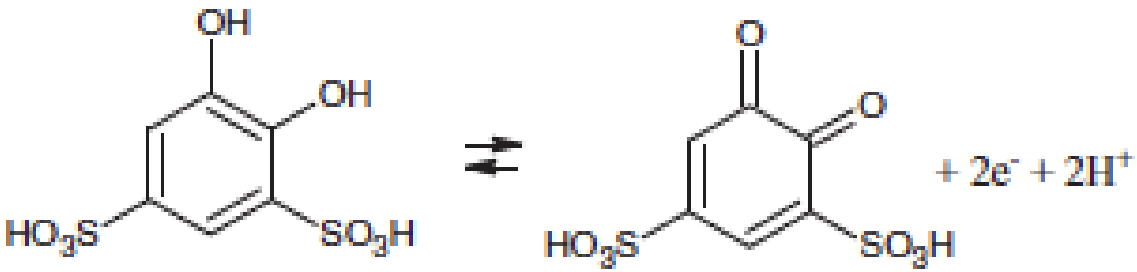


$E^0 = +0.85$ V

[1]

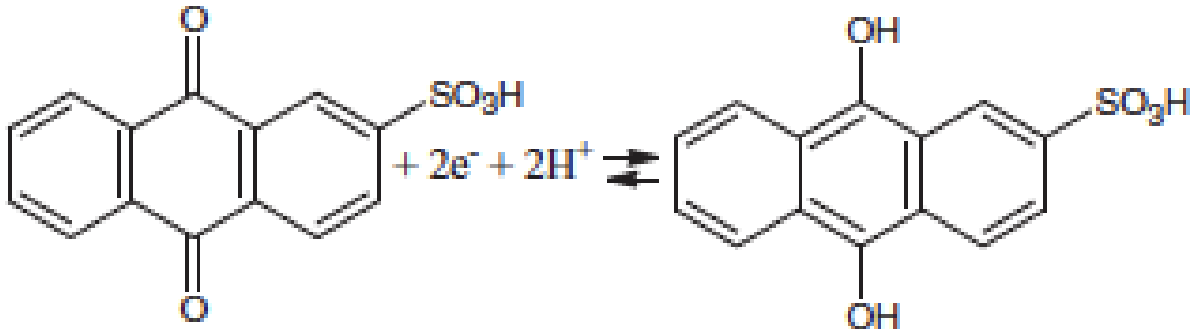


$E^0 = +0.09$ V

**2014**

# Photoelectrochemical cells for water splitting

# Photoelectrochemical cells for water splitting

## Solar powered water splitting system to produces $H_2$ and $O_2$

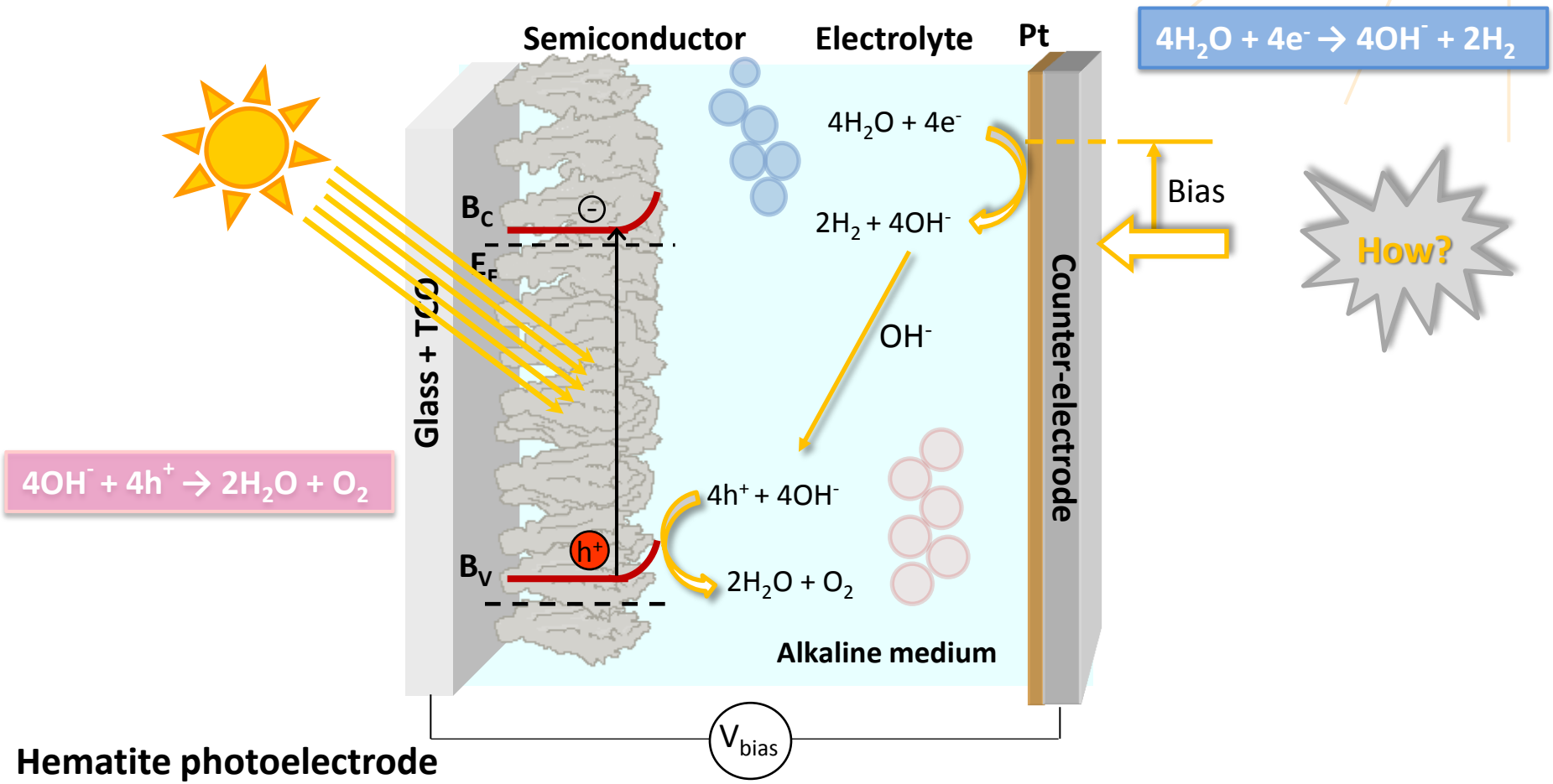


Hematite photoelectrode

# Photoelectrochemical cells for water splitting

## PortoCell

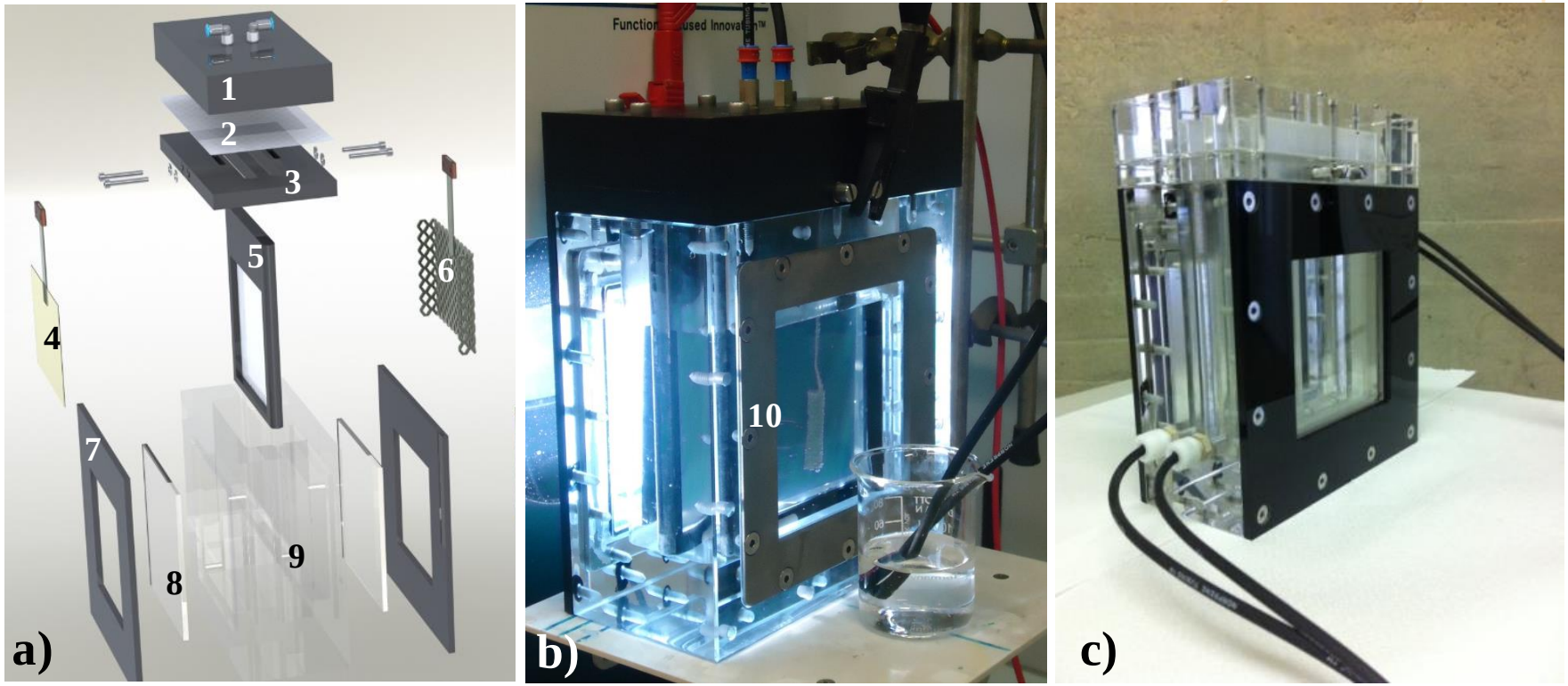

# Photoelectrochemical cells for water splitting

Band gap and band edge position of few semiconductors, pH = 0.

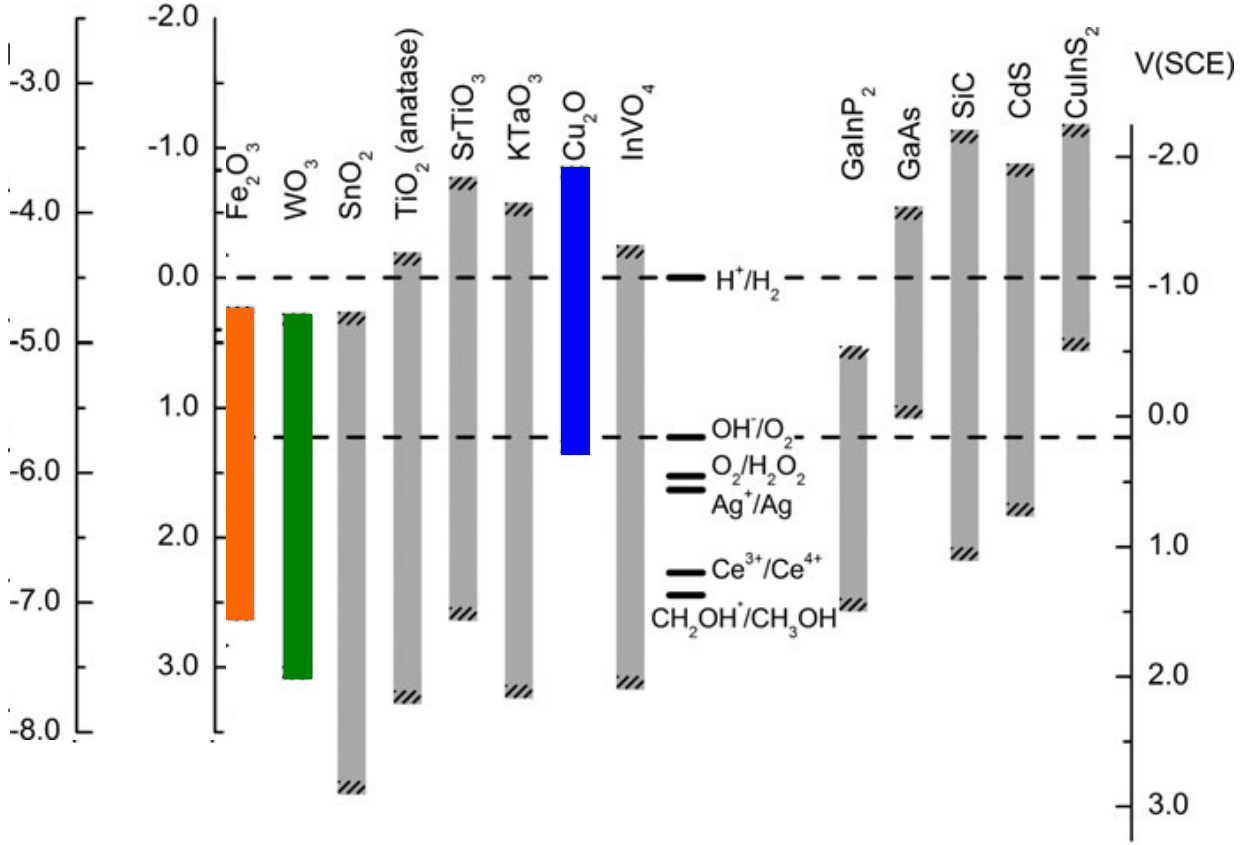

# A completely new world:

# Solar chargeable redox flow battery

# Solar rechargeable redox flow battery

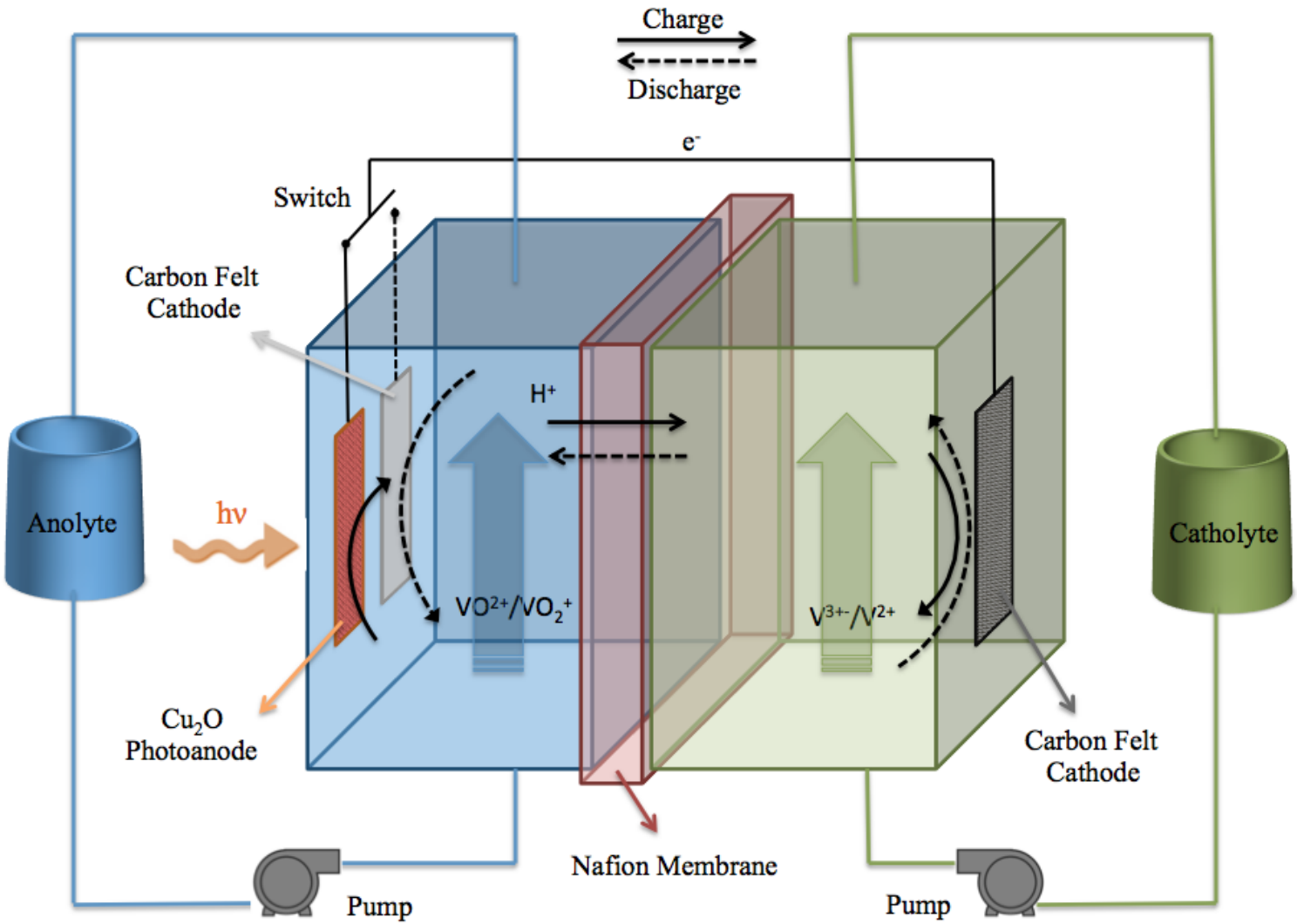

# Solar rechargeable redox flow battery

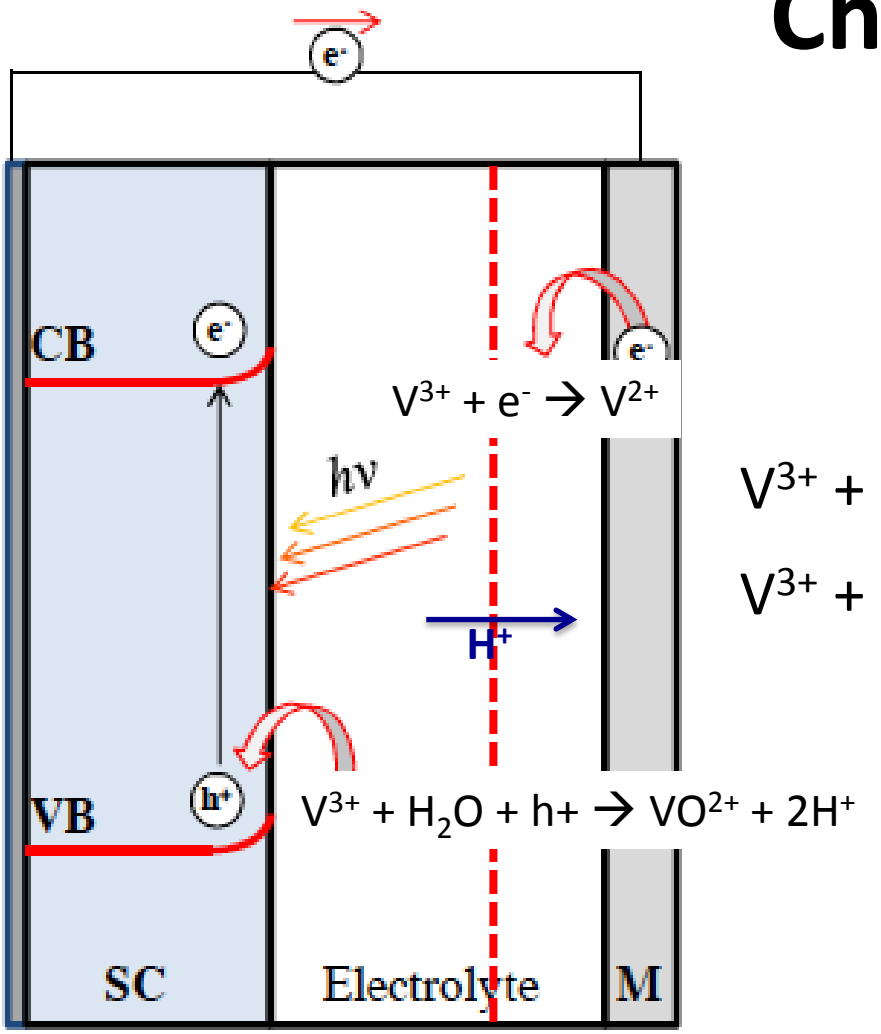


## Charge, pH ≈ 0

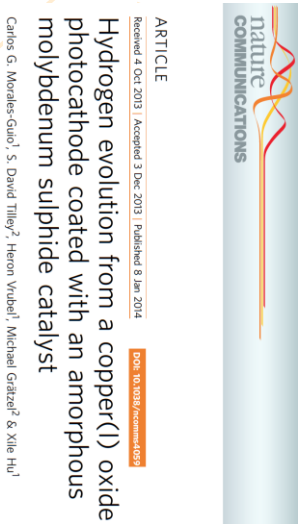
nature COMMUNICATIONS

ARTICLE

Received 4 Oct 2013 | Accepted 3 Dec 2013 | Published 8 Jan 2014 DOI: 10.1038/ncomms4059

Hydrogen evolution from a copper(I) oxide photocathode coated with an amorphous molybdenum sulphide catalyst

Carlos G. Morales-Guio[1], S. David Tilley[2], Heron Vrubel[1], Michael Grätzel[2] & Xile Hu[1]

$V^{3+} + e^- \rightarrow V^{2+}$, $E^0 = -0.26\ V_{SHE}$

$V^{3+} + H_2O + h+ \rightarrow VO^{2+} + 2H^+$, $E^0 = -0.34\ V_{SHE}$

Cuprous oxide ($Cu_2O$) band edges:

- Conduction Band potential: -0.91 V;
- Reduction Band potential: 1.3 V.

# Solar rechargeable redox flow battery

FEATURE ARTICLE www.rsc.org/materials | Journal of Materials Chemistry

## Solar hydrogen production with nanostructured metal oxides†

Roel van de Krol,* Yongqi Liang and Joop Schoonman

*Received 10th December 2007, Accepted 18th February 2008*
*First published as an Advance Article on the web 11th March 2008*
DOI: 10.1039/b718969a

Charging

$V^{3+} + e^- \rightarrow V^{2+}$, $E^0 = -0.26\ V_{SHE}$

$V^{3+} + H_2O + 2h^+ \rightarrow VO^{2+} + 2H^+$, $E^0 = -0.34\ V_{SHE}$

**pH = 0**

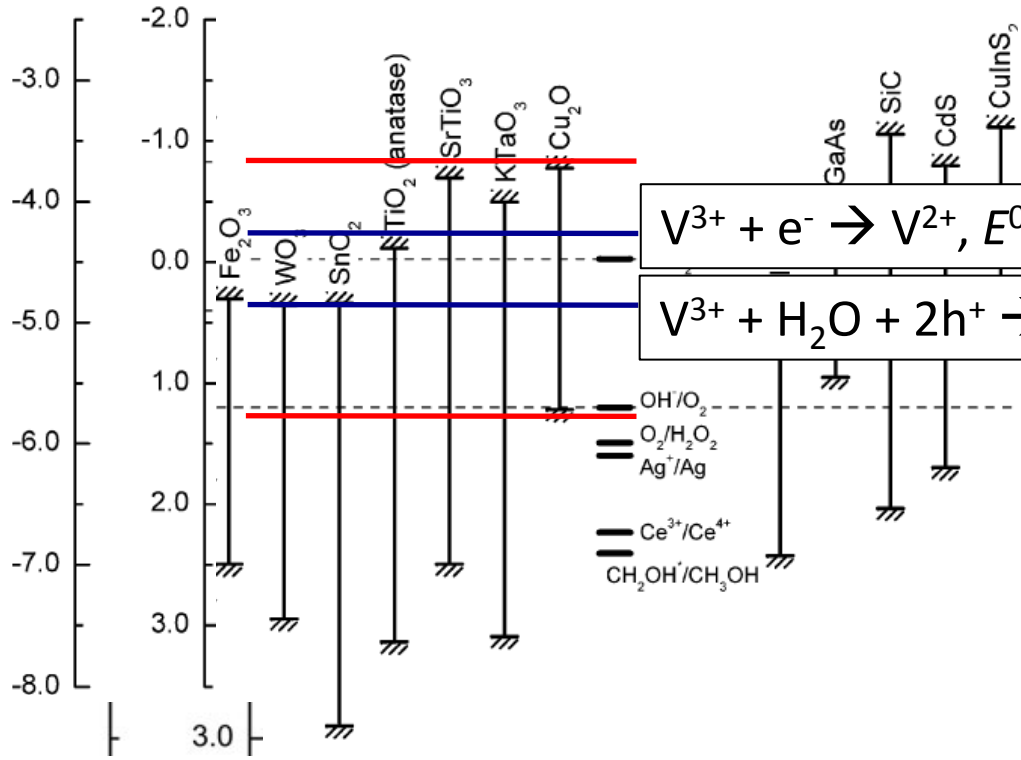


**Fig. 3** Energy band positions for various semiconductors at pH 14.[4,10–16] When no experimental data were available for this pH, the band positions were extrapolated using −59 mV per pH unit. It should be noted that values reported in the literature show significant scatter, up to a few tenths of a volt. Most values shown here are for polycrystalline films, obtained using capacitance (Mott–Schottky) measurements and corrected for the difference between the flatband potential and the conduction band.

# Solar rechargeable redox flow battery

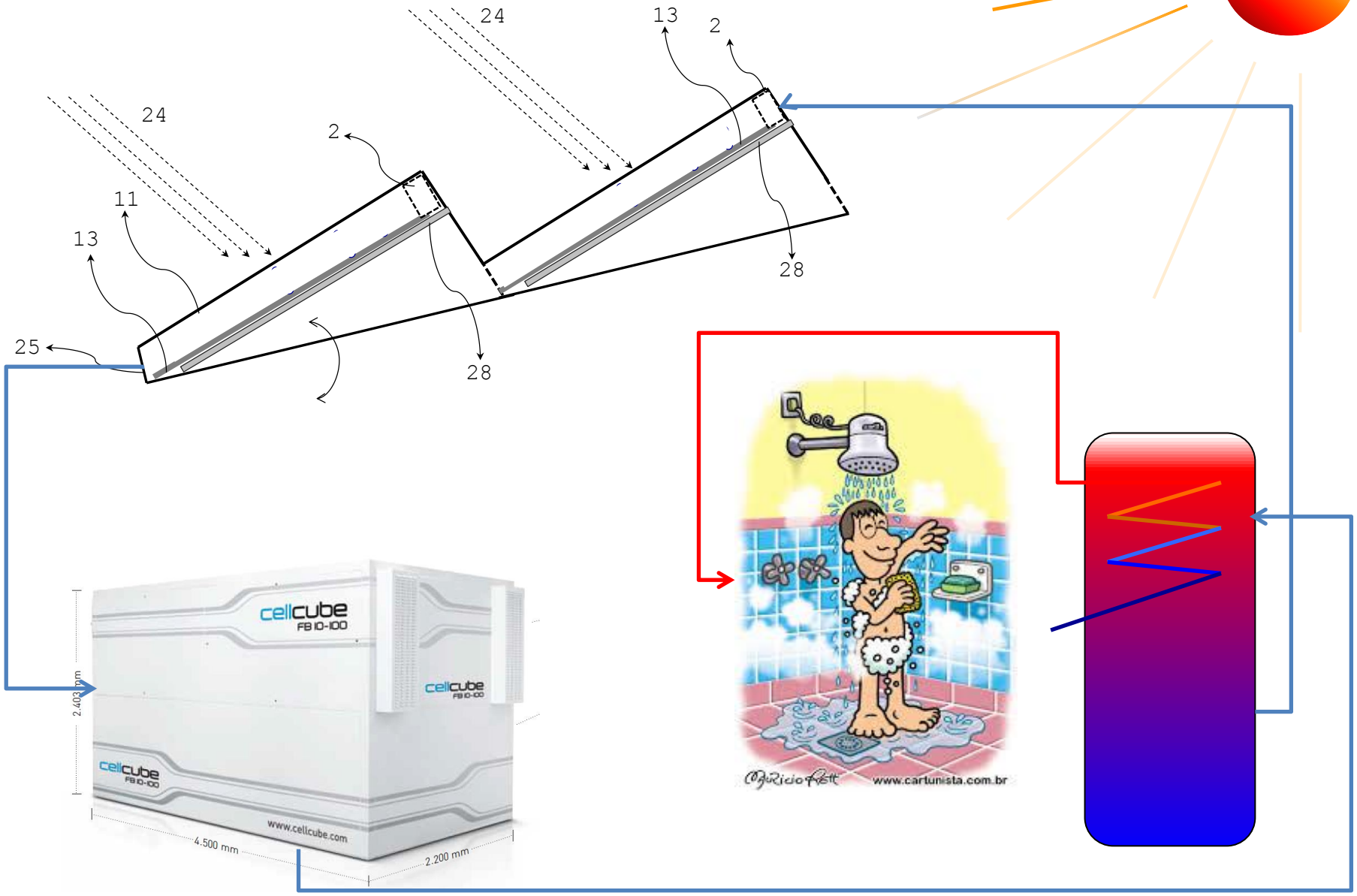

# Solar rechargeable redox flow battery

## Expected figures

| | |
|---|---|
| Overall energy efficiency | ~80 % |
| Electricity storage cost per cycle | 3 ¢€/kWh |
| Time durability | 20 years |
| Nominal cell voltage | 1.3 V |

## Solar rechargeable redox flow battery

| | |
|---|---|
| Specific power (assumed $\eta$ = 10 %) | 100 $Wp \cdot m^{-2}$ |
| Specific energy (assumed 1.6 $MWh \cdot year^{-1} \cdot m^{-2}$) | 4.4 $kWh \cdot day^{-1} \cdot m^{-2}$ |
| Volume of electrolyte produced per day (assumed 30 $Wh \cdot kg^{-1}$) | 29 $L \cdot day^{-1} \cdot m^{-2}$ |
| Typical electricity house - consumption per day | 9 kWh -> 300 L -> **20 $m^2$** |
| Heat production | 61 $kWh \cdot day^{-1}$* |

*Enough for heating 960 L of water from 5 °C to 60 °C assuming $\eta$ = 70 %

# Solar rechargeable redox flow battery

Fre3nergy

Spin-off company founded in 2014 on

**Redox flow batteries and direct solar charging technologies**

**Patent pending**: Bentien, A., Mendes, A. and Andrade, L., "A Solar Rechargeable Redox Flow Cell", EP 14154865.1, February 12, 2014

# Bio-chargeable redox flow batteries?

# The microbial RFB

# Bio-chargeable redox flow batteries?

## The microbial redox flow battery

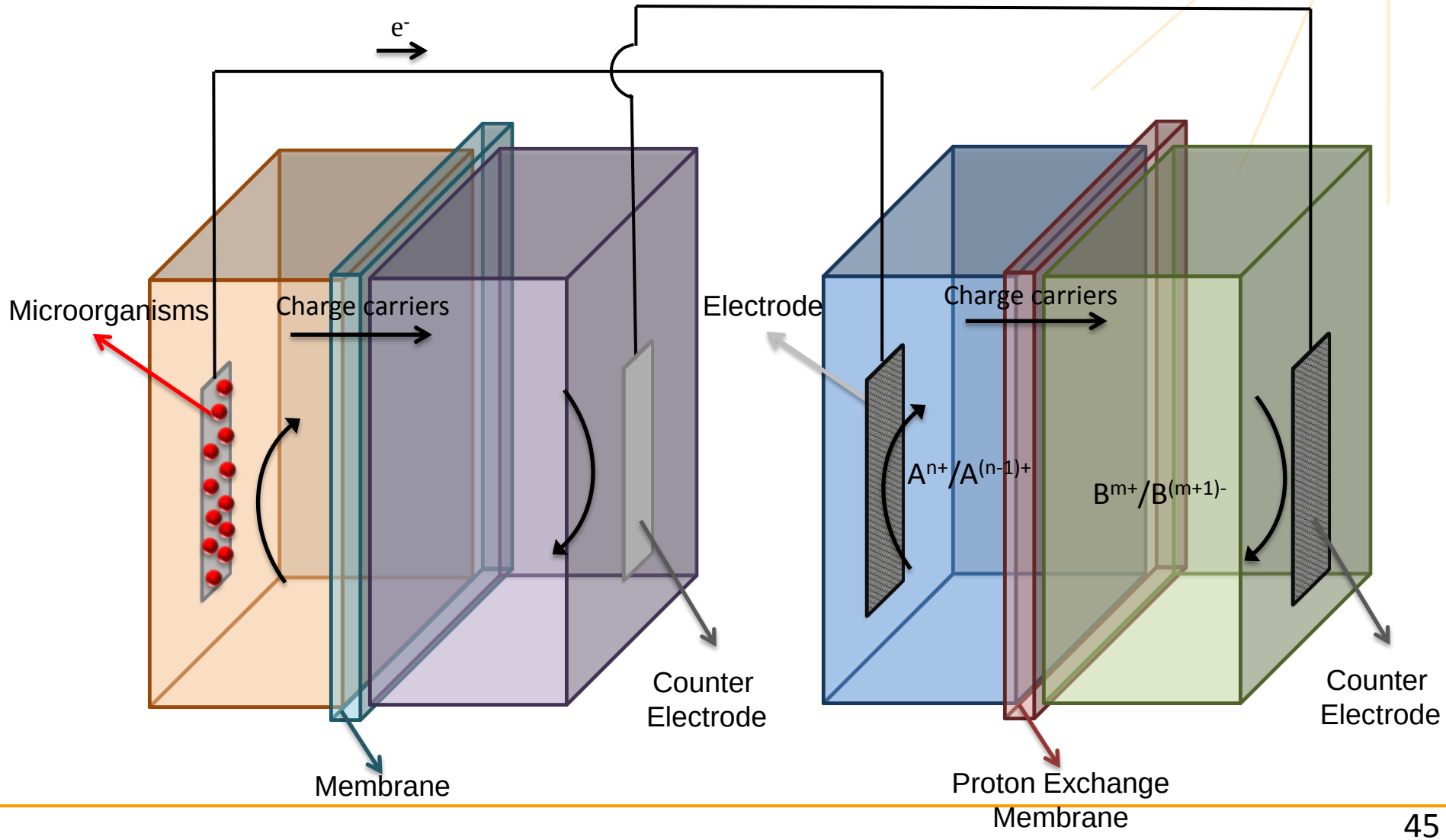

# Conclusions

# Conclusions

- ✓ New perovskite solar cells are expecting to have a production price of 0.1 €/Wp, ca. 3.5 times less than the best present price!
- ✓ Redox flow batteries will soon have a storage electricity cost of 3 ¢€/kWh/cycle – the lowest local storage cost technology;
- ✓ Photoelectrochemical cells are better used to store sunlight energy into RFB electrolytes!

# A new world

**My home is my castle:**

**I need sunlight but no grid!**

# Questions are welcome