From Knowledge Generation To Science-based Innovation

INESCTEC
TECHNOLOGY & SCIENCE
ASSOCIATE LABORATORY
COORDINATED BY
INESCPORTO
PORTUGAL

VAMOS and UNEXMIN

Eduardo Silva, et al
INESC TEC / ISEP Porto Polytechnic

On behalf of ¡Vamos! and UNEXMIN teams

ERDEM

Environmentally Responsible Deep-sea Mining

European Commission

EIP Raw Materials Recognized Commitment

ERDEM

An Ecosystem based approach in managing the exploitation of deep-sea resources

Develop and Pilot novel cost effective, remote and immersive technologies allowing a **tele-mining system** concept.

Deliver a mobile, wireless Environmental Impact monitoring system.

Introduce new techniques to assess resilience of Deep Sea Ecosystems and of biodiversity

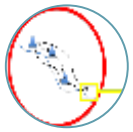

Study and analyse environmental dynamics, population variability and connectivity of communities in deep sea habitats

Provide advanced understanding of geological processes associated to the minerals' extraction.

Governance, Legal instruments and Management Practices, Policy Recommendations and Standardization of tools and methods for assessing environmental impact

KIC EIT Raw Materials

The Green Push to the Deep Underwater Mining

Some of the “ins” and “outs” of conventional mining – from a safety and environmental perspectives

Some of the “ins” and “outs” of conventional mining – from a safety and environmental perspectives

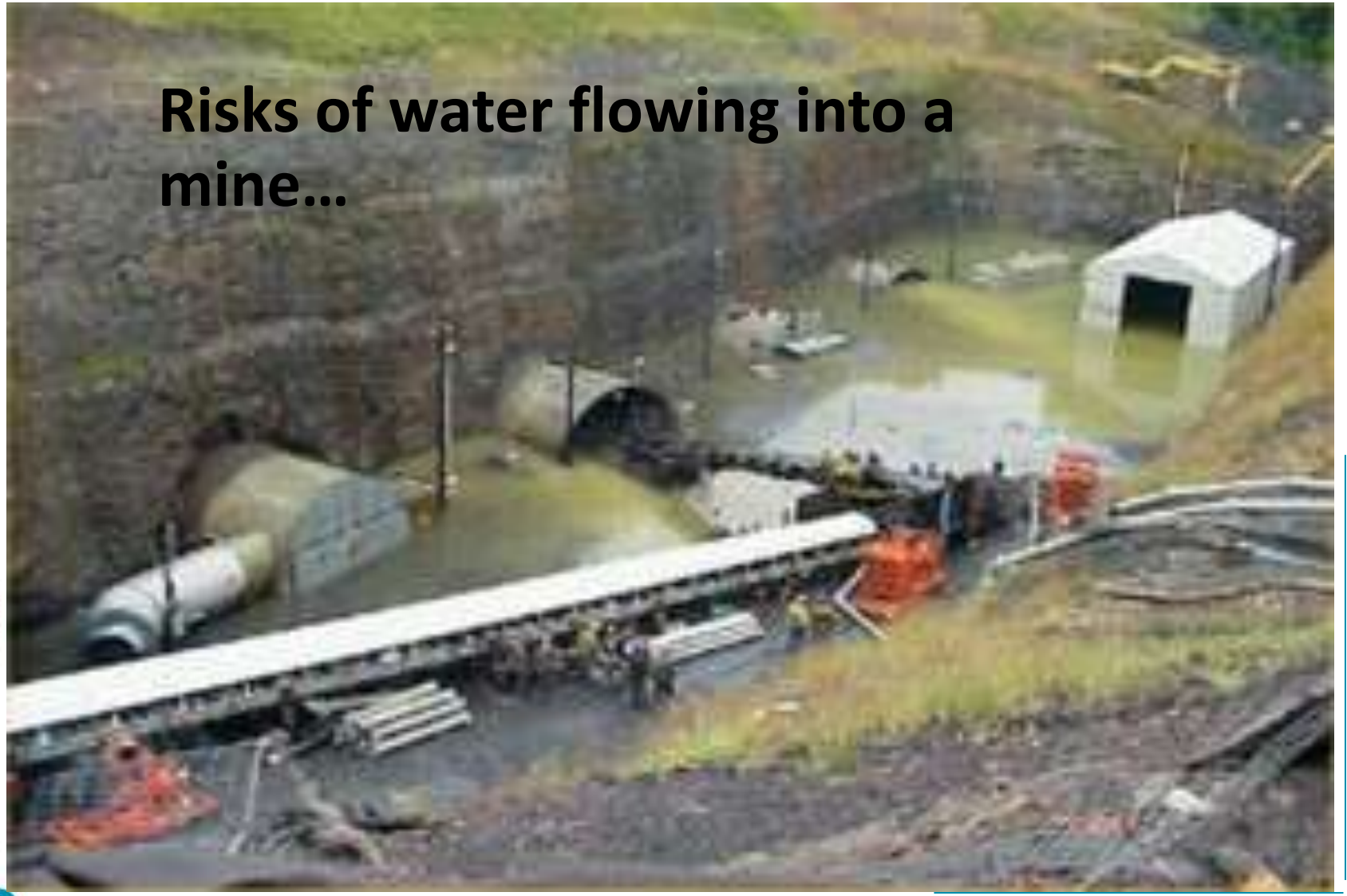

Some of the “ins” and “outs” of conventional mining – from a safety and environmental perspectives

Some of the “ins” and “outs” of conventional mining – from a safety and environmental perspectives

VAMOS – Viable and Alternative Mine Operating System

Underwater mining technology
Awareness for precision mining, environment modelling in difficult conditions

H2020 Societal Changes 5 (Raw Materials) RIA

2015- 2018

17 partners, 9 countries

9,2 M€

Partners: BMT, SMD (UK), INESC TEC, Damen Dredging (NED), Trelleborg (NED), Sandvik (AU), Mineralia (PT), EDM(PT)...

INESC TEC Role: Positioning, navigation and awareness system

This project has received funding from the European Union's Horizon 2020 research and innovation programme under grant agreement No 642477.

¡VAMOS! Overview…

iVAMOS! Underview…

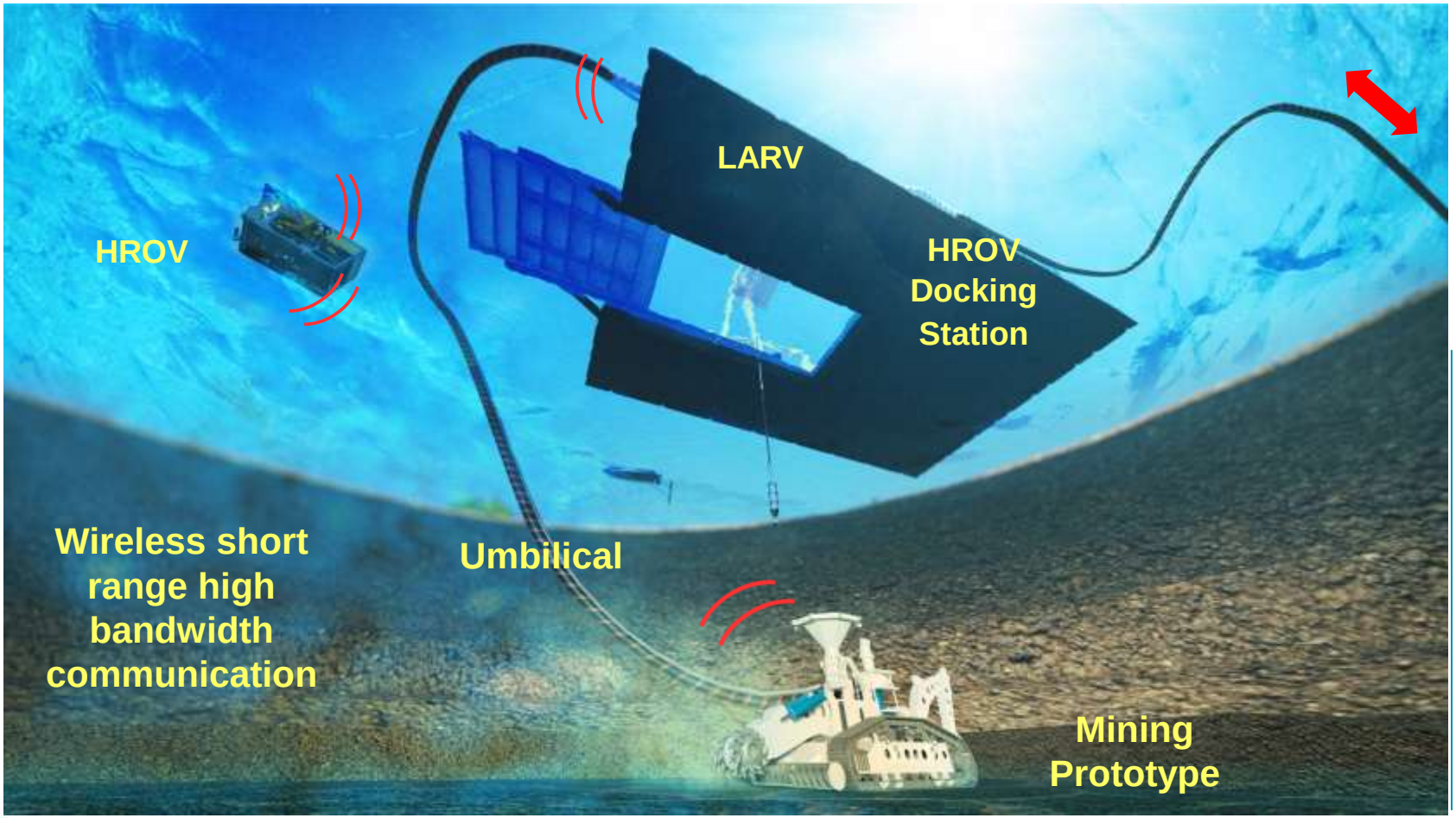

Global PNA Data Flow…

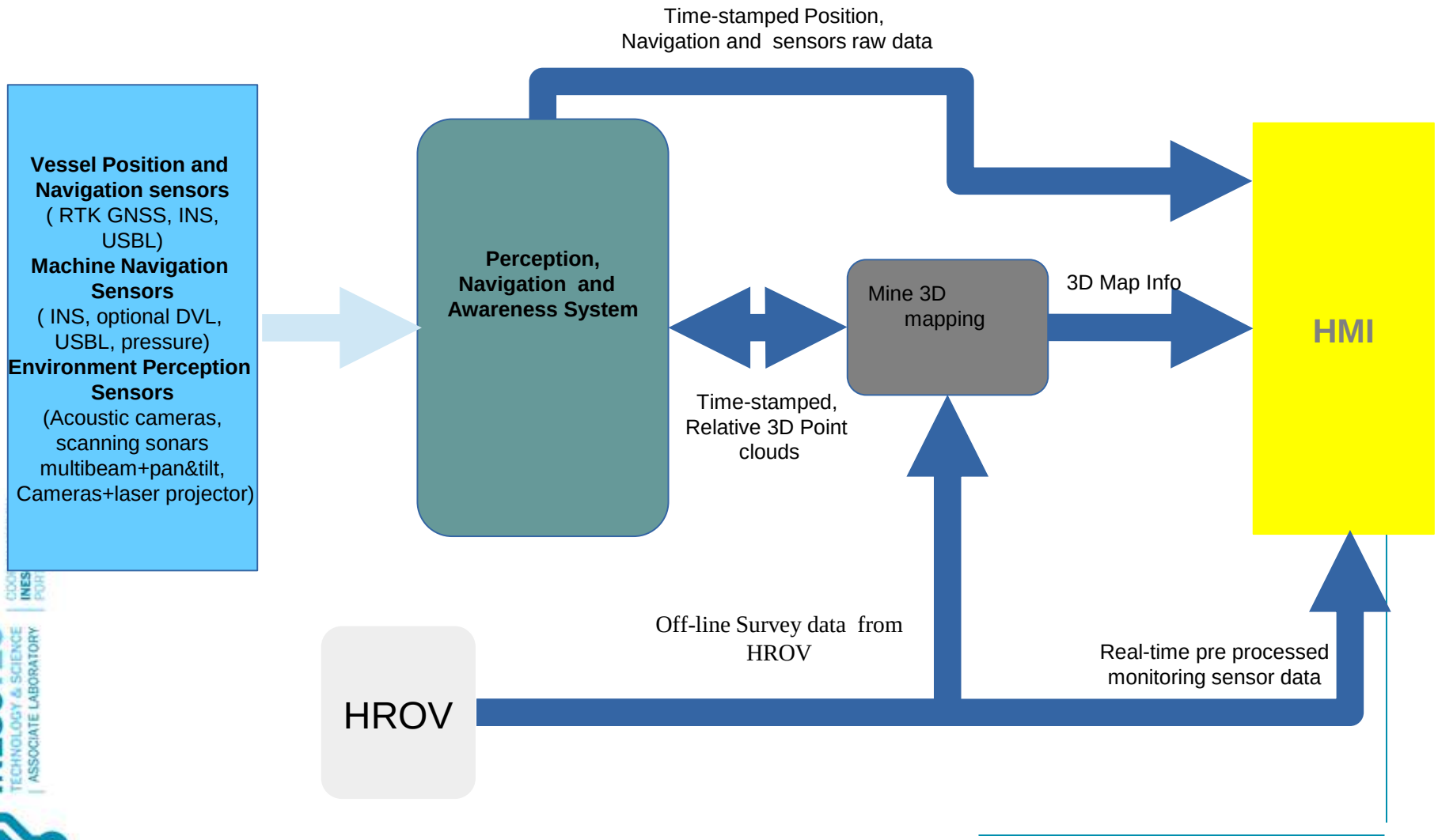

Real Time Grade Control…

Key chalenge

Enable real-time monitoring **boosting sensitivity** and establishing robust calibration protocols. *(double pulse configurations and gas assisted sampling)*

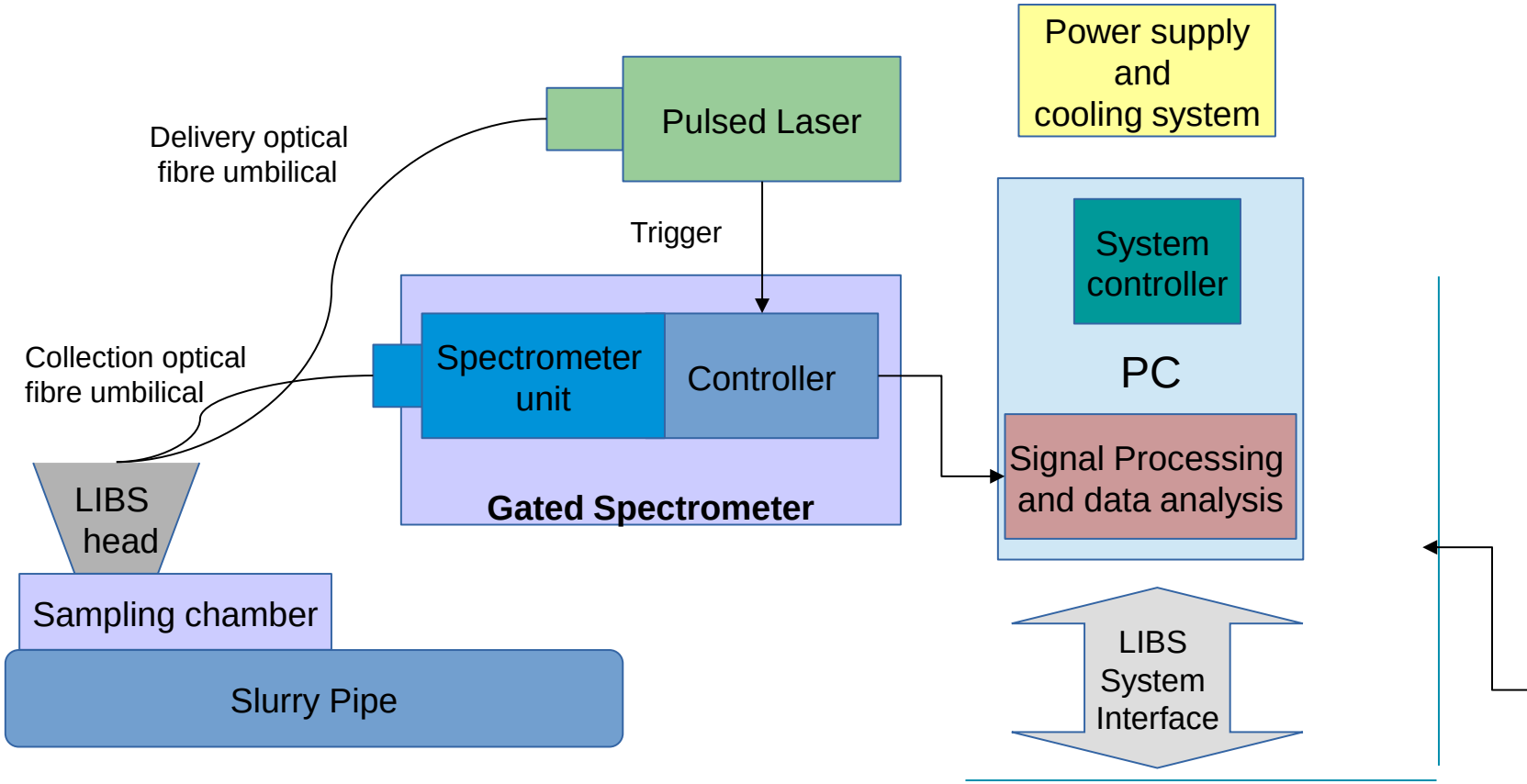

Advantages of underwater mining

- High grades
- Highly scalable
- Low capital intensity
- No land clearance or people moved
- 40+ years offshore oil & gas
- Minimal waste
- Reusable equipment
- Competitive OPEX
- Increased worker safety

www.VAMOS-PROJECT.eu

UNEXMIN - Autonomous Underwater Explorer for Flooded Mines

Horizon 2020

Call: H2020-SC5-2015-one-stage

Topic: SC5-11d-2015

Type of action: RIA

Proposal number: 690008

Proposal acronym: UNEXMIN

13 partners, 9 countries

4,87 M€

Partners: INESC TEC, EDM(PT), Geoplano...